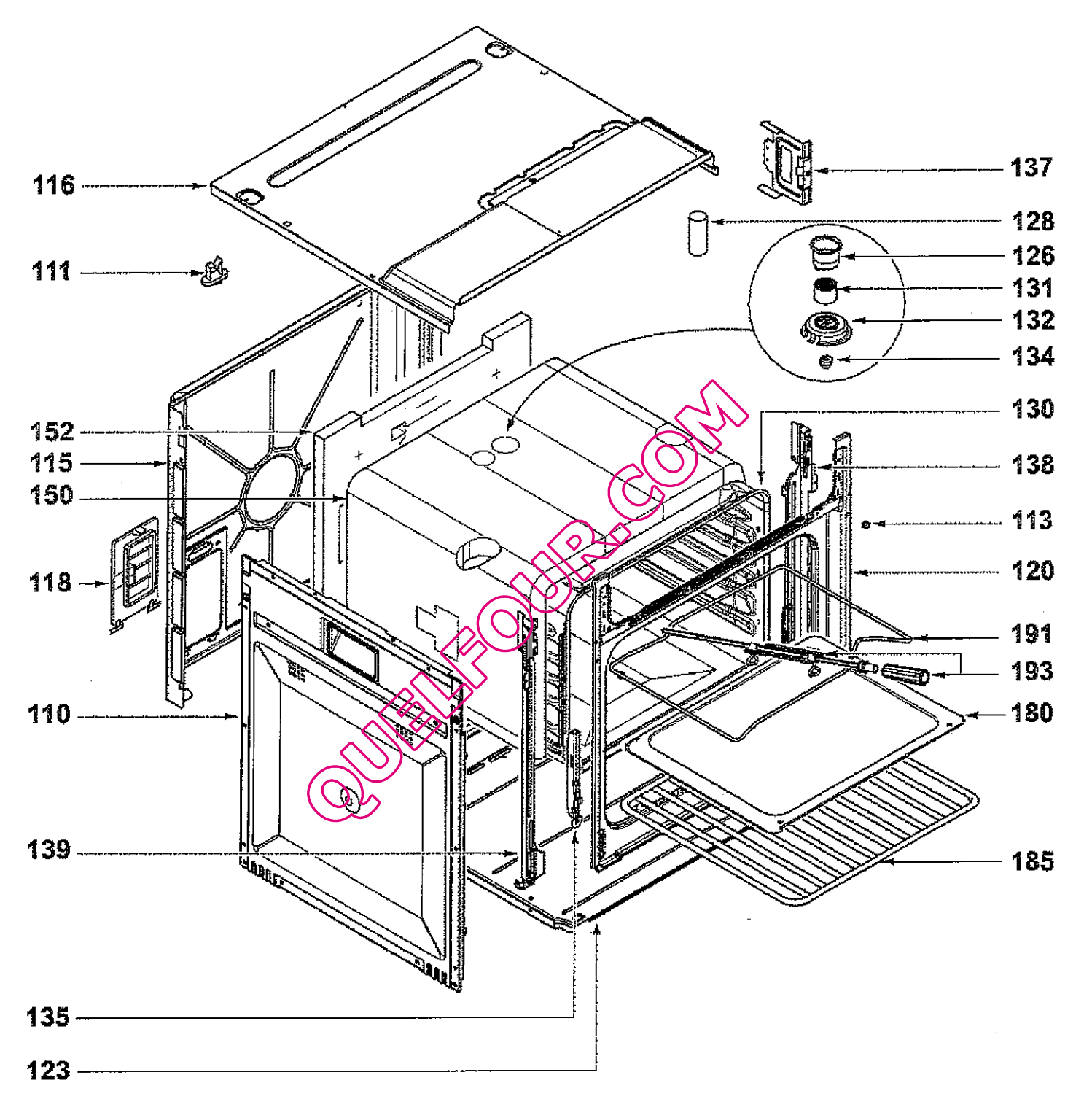

QUELFOUR.COM

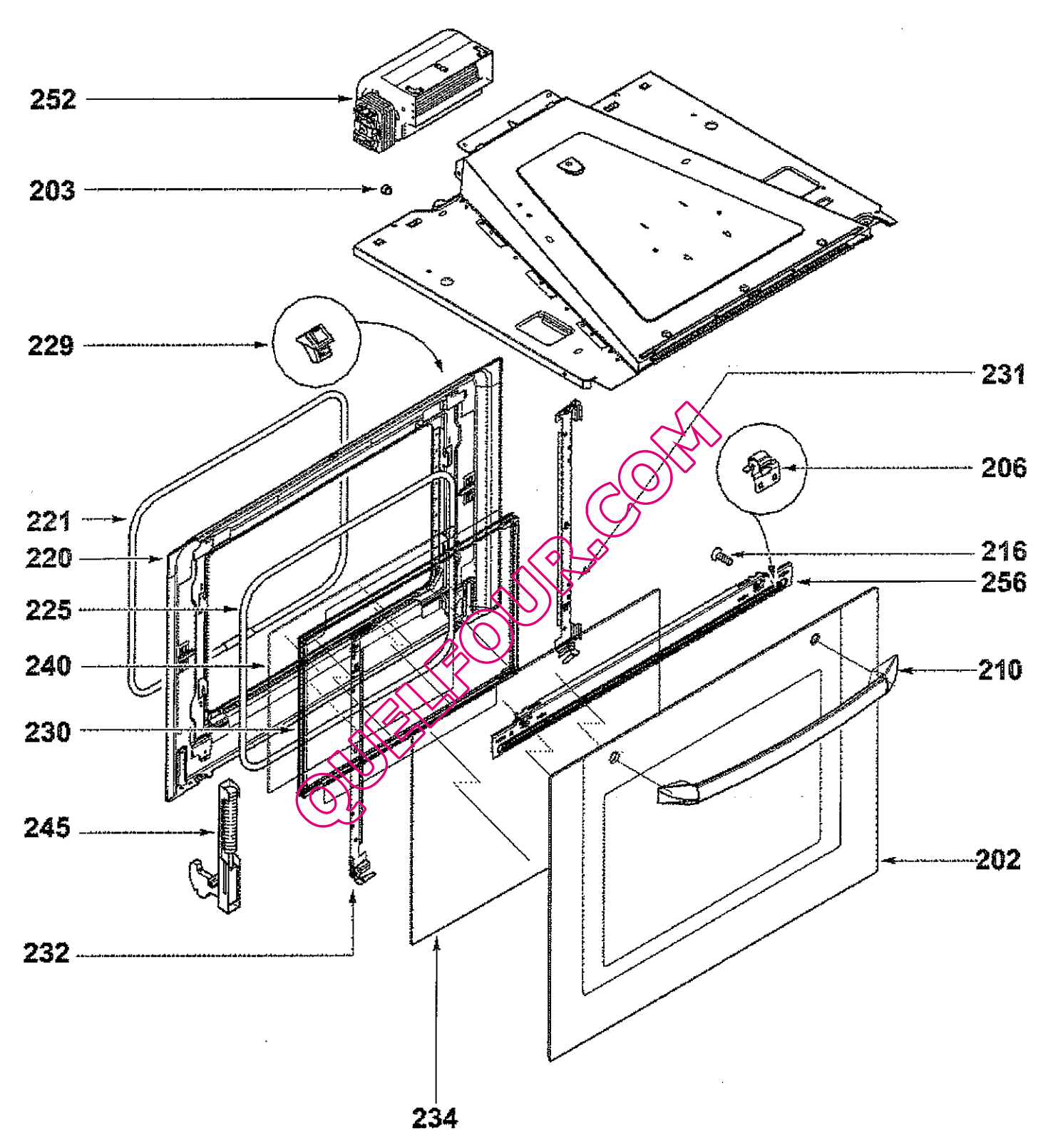

QUELFOUR.COM

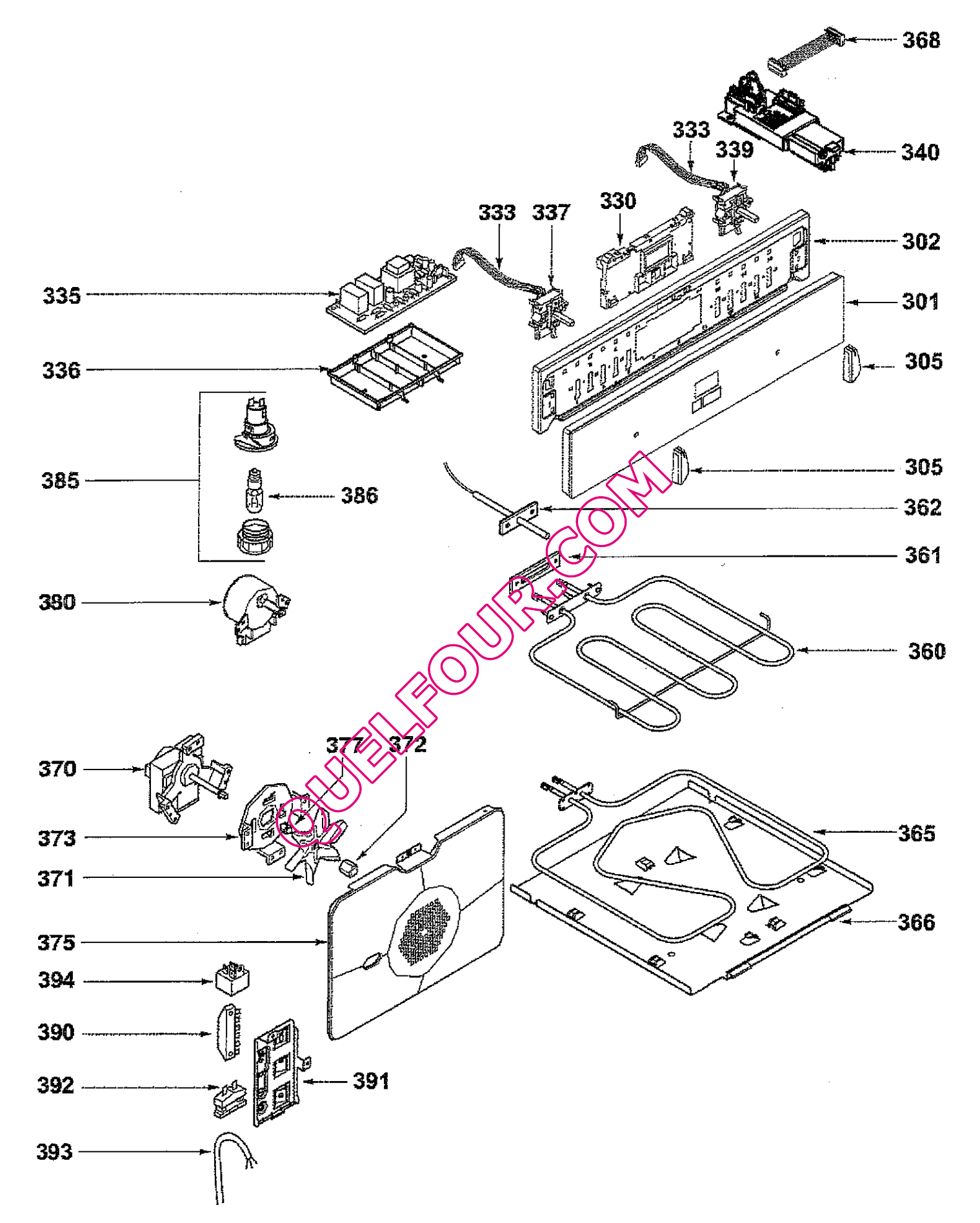

QUELFOUR.COM